AWALOCK by Awafast

CERNIERA A LIBRO

MY60136.2.5.6

STEEL LEAF HINGE (60*136mm-Black Coated)

550Kg.

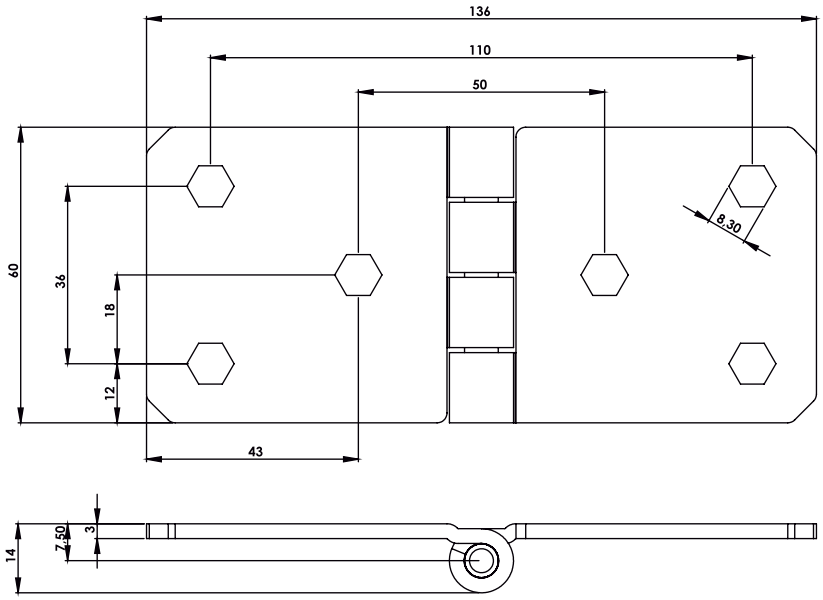

Applications

* Generator Cabinets
* Compressor Cabinets
* Electric Panels
* Machinery Covers

Material

* Body: Steel St 37
* Pin : Stainless Steel (AISI 304)
* 5: Finish: Black Coated